Hindawi Publishing Corporation
EURASIP Journal on Advances in Signal Processing
Volume 2007, Article ID 16286, 5 pages
doi:10.1155/2007/16286

Research Article

A 2-bit Adaptive Delta Modulation System with Improved Performance

E. A. Prosalentis and G. S. Tombras

Laboratory of Electronics, Department of Physics, University of Athens, Panepistimiopolis, Athens 157 84, Greece

Received 10 May 2006; Revised 24 August 2006; Accepted 26 August 2006

Recommended by Douglas O'shaughnessy

A 2-bit adaptive delta modulation system with improved performance is proposed in this paper. Its main characteristic is a new adaptation algorithm that incorporates both memory and look-ahead instantaneous step-size estimation and leads the modulator into generating a 2-bit output codeword. As shown by computer simulation results, the proposed system offers reduced overshoot and fast response to signal variations in comparison to other similar systems.

1. INTRODUCTION

Adaptive delta modulation (ADM) is a common alternative to fixed step-size delta modulation (DM) offering increased dynamic range and reduced slope-overload noise at the expense of some added complexity. This is achieved by varying the step size of the basic 1-bit quantizer according to a decided rule with respect to input signal variations. Among the many adaptive schemes that have been described in the past, the widely known ADM with 1-bit memory or first-order constant factor delta modulation (CFDM), [1, 2], was the first system to introduce a "memory" function for step-size estimation at each sampling instant. Since then, various modifications and extensions of that basic instantaneously adaptive scheme have been proposed in the literature including 2- or 3-bit ADM and 2-digit ADM [2–8]. These multidigit systems provide for a variable rate in step changes between adjacent sampling instants incorporating various forms of "memory" and/or "look-ahead" step-size estimation, that is, feedback and/or feedforward adaptation, respectively, and offer enhanced overall performance in normalized comparison to single-bit adaptive DM [6–8]. Moreover, although they produce multidigit output codewords, they are considered to maintain the basic property of DM in that the quantized output signal value at each sampling instance is obtained from the predicted signal sample by adding or subtracting the corresponding step-size.

In this paper, we consider the adaptation algorithms of two multidigit ADM schemes, the 2-digit adaptive system by Tombras [7] and Tombras and Karybakas [8] and the 2-bit adaptive system by Aldajani and Sayed [9, 10]. Both systems, briefly described in Section 2, offer an exponentially variable rate in step-size changes and the corresponding quantizers generate output codewords with information about both the sign and the relative magnitude of the step-size to the receiver decoder. Following this approach, in Section 3, we describe a modified adaptation algorithm of the 2-digit adaptive system which leads to a new 2-bit ADM system. In Section 4, simulation results show that the proposed new system offers improved tracking capability to input signal variations, high signal-to-noise ratio (SNR) values, and wide dynamic range when compared to the considered systems under normalized operation conditions. Concluding remarks are given in Section 5.

2. BRIEF DESCRIPTION OF THE CONSIDERED 2-DIGIT AND 2-BIT ADM SYSTEMS

The block diagram of a typical delta modulator is shown in Figure 1. Its operation is based on 1-bit quantization at each sampling instant of the error signal $e(n)$ that results from the input sample $x(n)$ after subtracting its predicted value $y(n)$, that is, $e(n) = x(n) - y(n)$. The generated output signal $\mathrm{L}(n)$ takes the values $+1$ or -1 and consists of binary pulses which are fed into an integrator in the feedback loop resulting in a

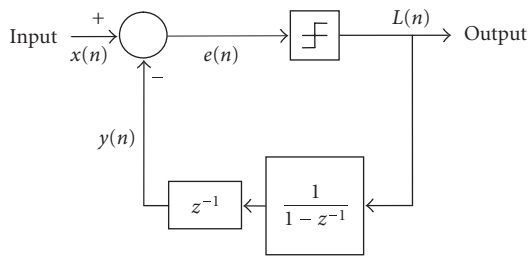

Figure 1: Block diagram of a typical delta modulator.

fixed step-size Δ increase or decrease of its previous output $y(n-1)$, so that

$$\operatorname{sgn}[e(n)] = \operatorname{sgn}[x(n) - y(n)] = \mathrm{L}(n), \tag{1a}$$

$$y(n) = y(n-1) + \mathrm{L}(n)\Delta. \tag{1b}$$

In ADM systems, the step size of the employed quantizer is varying according to a decided rule with respect to input signal. The general form of common instantaneous step-size adaptation algorithms in ADM systems can be written as

$$\Delta(n) = M(n)\Delta(n-1), \tag{2}$$

where $\Delta(n)$ is the step-size magnitude at time n with values within a region $[\Delta_{\min}, \Delta_{\max}]$ and $M(n)$ is the corresponding step-size multiplier defined according to a specific rule. For example, in CFDM [1], $M(n)$ depends on the present and previous output bits $\mathrm{L}(n)$ and $\mathrm{L}(n-1)$ revealing a "memory" characteristic in step-size estimation at each sampling instant, while in multibit ADM, $M(\mathrm{n})$ can be a function of present and previous output codewords $\mathrm{L}_w(n)$ and $\mathrm{L}_w(n-1)$, being the "memory" characteristic, [3, 4], as well as a function of the magnitude of the error signal $e(n)$, that is, the difference between the input sample $x(n)$ and its predicted value $y(n)$, with respect to a specified threshold, [4, 5], being the "look-ahead" characteristic in step-size estimation, respectively.

The 2-digit ADM system, [7, 8], follows the general rule expressed by (2) where $M(n)$ depends on both the sign of $e(n)$ and $e(n-1)$ (equivalently the present and previous output codewords) and the magnitude of $e(n)$, as expressed by

$$M(n) = \begin{cases} N(n)\beta & \text{if } |e(n)| \geq \dfrac{1}{2}(\beta+1)N(n)\Delta(n-1), \\ N(n) & \text{otherwise}, \\ \dfrac{N(n)}{\beta} & \text{if } |e(n)| \leq \dfrac{1}{2}\left(\dfrac{1}{\beta}+1\right)N(n)\Delta(n-1), \end{cases} \tag{3}$$

with $\beta > 1$, and

$$N(n) = \begin{cases} \alpha & \text{if } \operatorname{sgn}[e(n)] = \operatorname{sgn}[e(n-1)], \\ \dfrac{1}{\alpha} & \text{if } \operatorname{sgn}[e(n)] \neq \operatorname{sgn}[e(n-1)], \end{cases} \tag{4}$$

where $\alpha > 1$.

It is clear that at each sampling instance n the step multiplier $M(n)$ takes one of six in total values and, therefore, the produced output codeword $\mathrm{W}(n)$ consists of a binary digit $\mathrm{L}_1(n)$ taking values 1 or -1 and a ternary digit $\mathrm{L}_2(n)$ taking values 1, 0, or -1. By considering that $\mathrm{L}_1(n)$ describes the sign of $e(n)$ according to (1a), and $\mathrm{L}_2(n)$ describes the relation between $M(n)$ and $N(n)$, the adaptation rule for the 2-digit ADM can be written in a compact form as

$$\Delta(n) = \alpha^{\mathrm{L}_1(n)\mathrm{L}_1(n-1)}\beta^{\mathrm{L}_2(n)}\Delta(n-1) \tag{5}$$

with $\Delta_{\min} \leq \Delta(n) \leq \Delta_{\max}$ and $\mathrm{L}_1(n) = (1 \text{ or } -1)$ and $\mathrm{L}_2(n) = (1, 0, \text{ or } -1)$ for every n. Following the above, the quantized sample $y(n)$, that is, the predicted value for the input sample $x(n)$, at each sampling instant will therefore be given by

$$y(n) = y(n-1) + \mathrm{L}_1(n)\Delta(n) \tag{6a}$$

with

$$\mathrm{L}_1(n) = \operatorname{sgn}[e(n)] = \operatorname{sgn}[x(n) - y(n)] \tag{6b}$$

and this value is to be recovered at the receiver output prior filtering.

The 2-bit ADM system described by Aldajani, [9, 10], generates output codewords consisting of two binary digits which carry information about the sign of the error signal $e(n) = x(n) - y(n)$ as well as its absolute value, so that the step size is determined at each sampling period according to the rule

$$\Delta(n) = \begin{cases} \alpha\Delta(n-1) & \text{if } |e(n)| > \Delta(n-1), \\ \left(\dfrac{1}{\alpha}\right)\Delta(n-1) & \text{otherwise}, \end{cases} \tag{7a}$$

where $\alpha > 1$, and its sign by

$$\mathrm{L}_1(n) = \operatorname{sgn}[e(n)]. \tag{7b}$$

Denoting the two output binary digits as $\mathrm{L}_1(n)$ and $\mathrm{L}_2(n)$ with values 1 or -1, the step adaptation rule of the 2-bit ADM system, following the general form given by (1), can then be expressed as

$$\Delta(n) = \alpha^{\mathrm{L}_2(n)}\Delta(n-1) \tag{8}$$

so that again

$$y(n) = y(n-1) + \mathrm{L}_1(n)\Delta(n). \tag{9}$$

3. THE PROPOSED NEW 2-BIT ADAPTATION ALGORITHM

Based on the adaptation algorithm of the 2-digit ADM system presented above, we now propose a modification that eliminates the need of a ternary digit in the generated output codeword at the expense of a slightly inferior SNR performance. However, the resulting new 2-bit ADM maintains its "memory" and "look-ahead" characteristics in step-size estimation as well as its ability to offer high SNR values, reduced overshoot, and fast response to input signal variations.

Following (2), (3), and (4), the new algorithm is based on the replacement of (3) by

$$M(n) = \begin{cases} N(n)\beta & \text{if } |e(n)| \geq \frac{1}{2}\left(\beta + \frac{1}{\beta}\right)N(n)\Delta(n-1), \\ \frac{N(n)}{\beta} & \text{otherwise} \end{cases} \tag{10}$$

with $\beta > 1$.

According to this equation, at each sampling instant, the absolute value of the error signal $e(n)$ is compared to a threshold being in the middle of the distance between the two possible step-size values, that is, $N(n)\Delta(n-1)\beta$ and $N(n)\Delta(n-1)/\beta$. Hence, similarly to the 2-digit ADM system, the relation between $M(n)$ and $N(n)$ needs to be represented at the encoder output by a second digit which, here, takes only two values and, thus, it can be a binary digit $\mathrm{L}_2(n)$ with values 1 (e.g., amplitude +V) or −1 (amplitude −V).

However, considering the 2-digit ADM system and its ternary second output digit or, equivalently, the three possible values for $M(n)$ given by (3), the omitted third condition, described by (10), is partly covered by introducing an additional memory function with respect to the second output bit's present and previous values, that is, $\mathrm{L}_2(n)$ and $\mathrm{L}_2(n-1)$. Hence, a new variable $\gamma(n)$ is defined as

$$\gamma(n) = \begin{cases} \gamma & \text{if } \mathrm{L}_2(n) = \mathrm{L}_2(n-1) = -1, \\ 1 & \text{otherwise,} \end{cases} \tag{11}$$

where $\gamma > 1$.

Considering (10) and (4), the step-size adaptation rule of the new 2-bit ADM system is now written in the form

$$\Delta(n) = \alpha^{\mathrm{L}_1(n)\mathrm{L}_1(n-1)}\beta^{\mathrm{L}_2(n)}\gamma(n)\Delta(n-1), \tag{12}$$

where $\gamma(n)$ is specified by (11), and, again,

$$y(n) = y(n-1) + \mathrm{L}_1(n)\Delta(n). \tag{13}$$

Following the above, the generated 2-bit output codeword conveys information about the sign and one out of six possible values for the new step-size multiplier $M'(n) = M(n)\gamma(n) = \Delta(n)/\Delta(n-1)$ to the appropriate demodulator. These values of $M'(n)$ are shown in Table 1 with respect to the corresponding combinations of present and previous output codewords of the proposed 2-bit ADM system. In addition, the values for constants α, β, and γ that appear in (11) and (12) are chosen as follows:

(i) α is set equal to the constant step-size multiplier—the ratio of the modified step-size to the previous step size—of CFDM [1, 2], widely known as P, since the first-bit memory function described by (3) is identical to its adaptation algorithm ($1 < \alpha \leq 2$),

(ii) β must be greater than α^2, where the exponent 2 reflects the bit-rate relationship between the presented system and CFDM (or LDM). Thus, if α is defined in the region $[1.1, 1.5]$, a reasonable choice for β will be $1.2 < \beta \leq 2.5$,

Table 1

$\mathrm{L}_1(n-1)$	$\mathrm{L}_2(n-1)$	$\mathrm{L}_1(n)$	$\mathrm{L}_2(n)$	$M'(n)$
1	1	1	1	$\alpha\beta$
1	1	1	−1	α/β
1	1	−1	1	β/α
1	1	−1	−1	$1/\alpha\beta$
1	−1	1	1	$\alpha\beta$
1	−1	1	−1	$\alpha\gamma/\beta$
1	−1	−1	1	β/α
1	−1	−1	−1	$\gamma/\alpha\beta$
−1	1	1	1	β/α
−1	1	1	−1	$1/\alpha\beta$
−1	1	−1	1	$\alpha\beta$
−1	1	−1	−1	α/β
−1	−1	1	1	β/α
−1	−1	1	−1	$\gamma/\alpha\beta$
−1	−1	−1	1	$\alpha\beta$
−1	−1	−1	−1	$\alpha\gamma/\beta$

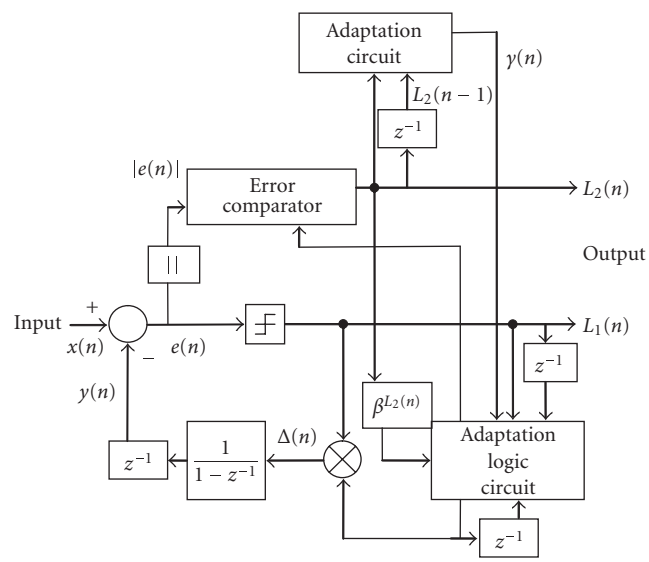

Figure 2: Block diagram of the proposed 2-bit ADM scheme.

(iii) $\gamma < \beta$, so that the step-size multipliers $\alpha\gamma/\beta$ and $\gamma/\alpha\beta$ (shown in Table 1) are smaller than α and $1/\alpha$, respectively. This condition ensures the convergence of the modulator.

The block diagram of the proposed 2-bit ADM system is shown in Figure 2. It consists of a basic DM scheme that generates output bit $\mathrm{L}_1(n)$ and a step-size $\Delta(n)$ estimation circuit including the error comparator according to (10) which produces output bit $\mathrm{L}_2(n)$, and two memory adaptation modules in order to specify $\gamma(n)$ and $\Delta(n)$ according to (11) and (12), respectively. Figure 3 shows the input-output characteristic of the error comparator which generates $\mathrm{L}_2(n)$.

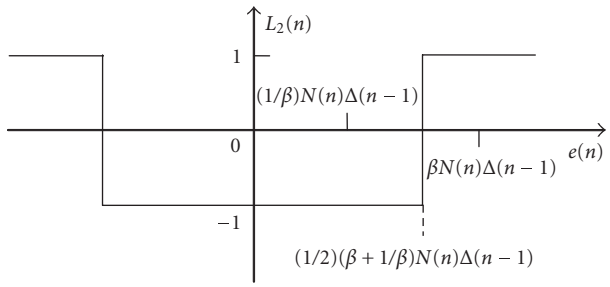

Figure 3: Input-output characteristic of the error comparator generating output bit $L_2(n)$.

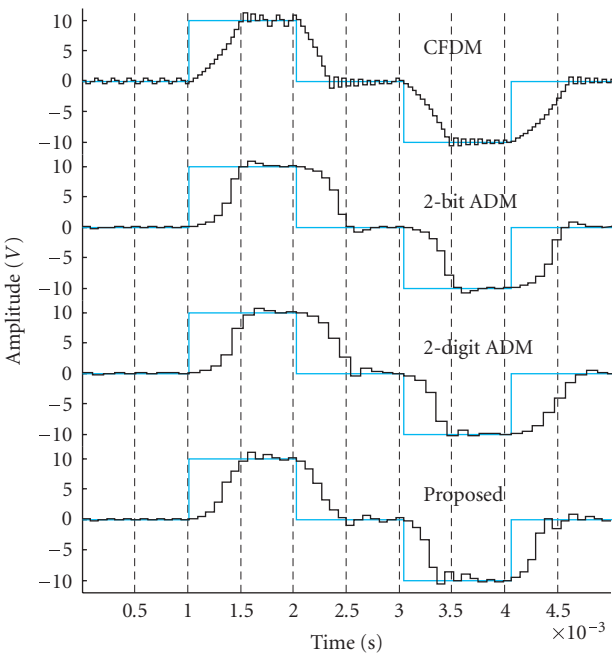

Figure 4: Bipolar returned-to-zero pulse response of the four systems for the same output baud.

4. SIMULATION RESULTS

In this section, we present computer simulation results for comparing the performance of the proposed 2-bit ADM system to that of CFDM, 2-bit ADM, and 2-digit ADM.

At first, we use a bipolar return-to-zero rectangular input pulse in order to compare the four systems in terms of their pulse response and overshoot characteristics. All systems are considered to generate exactly the same baud at their output, meaning that the sampling rate of the 2-bit ADM and the proposed system operate at half the sampling rate f_s of CFDM, while the 2-digit ADM at 2.6 times lower rate than f_s [7, 8]. In addition, all systems assume the same initial step size. The results, shown in Figure 4, reveal a substantially faster response of the proposed 2-bit ADM system in comparison to the two other multidigit schemes, and reduced overshoot with faster settling time in comparison to CFDM.

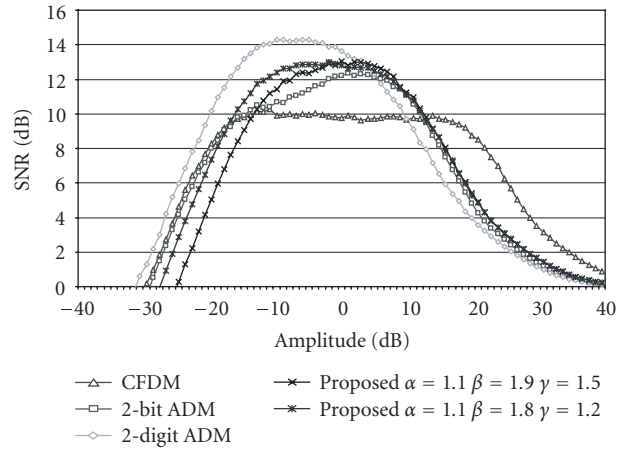

Figure 5: SNR values for different amplitudes of a speech input signal for the same output bit rate (dynamic range of step size: ±20 dB).

In a second comparison, we use an actual speech signal of 5 seconds duration sampled at 22050 Hz. The same sampling rate is used for CFDM, while for the 2-bit ADM and the proposed system, the sampling rate is 22050/2 Hz, and for the 2-digit ADM, 22050/2.6 Hz. We then choose the initial step-size for all the systems under comparison to be the value of the optimum step-size of a linear DM system, that is, the step size that maximizes SNR for the particular speech signal. In addition, we define two ranges of step size variations, being ±20 dB and ±30 dB with respect to the chosen initial step size. Finally, we use two sets of values for the parameters α, β, and γ of the proposed system: $[\alpha = 1.1, \beta = 1.9, \gamma = 1.5]$ and $[\alpha = 1.1, \beta = 1.8, \gamma = 1.2]$, while for CFDM, we choose $\alpha = 1.1$, for 2-bit ADM system $\alpha = 2$, and for the 2-digit system $\alpha = 1.1$ and $\beta = 2\alpha$. All these values are considered optimum for speech signals [1, 7, 8, 10].

The comparison is carried out in terms of the achieved SNR for different amplitudes of the chosen input signal segment for the two dynamic ranges of step-size variation, as mentioned above, and the obtained simulation results are shown in Figures 5 and 6, respectively. In both figures, CFDM offers smooth operation with respect to the obtained SNR values over a range of input amplitudes that corresponds to the range of step-size variations. Compared to the other systems, this smooth operation is achieved at the expense of inferior SNR values. The best SNR values are achieved by the 2-digit ADM at the expense of a slightly limited input dynamic range, while the 2-bit system and the proposed new one offer relative high SNR values maintaining an acceptable high-input dynamic range. However, the proposed new 2-bit ADM system appears to retain high SNR values in a smoother manner than that of the 2-bit system. Thus, this reveals a smooth and stable operation over a wide range of input signal amplitudes for both sets of values for α, β, and γ.

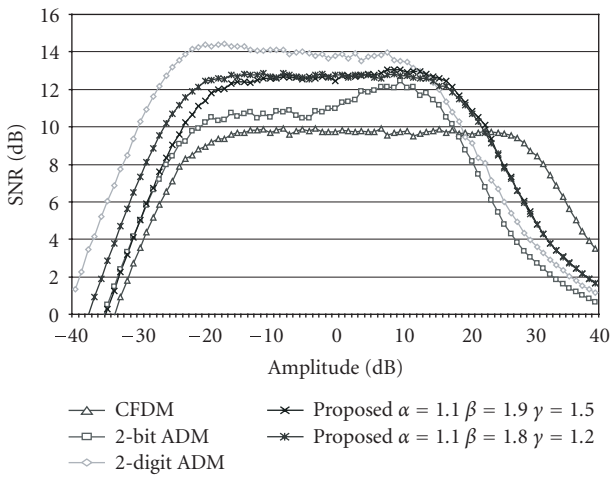

Figure 6: SNR values for different amplitudes of a speech input signal for the same output bit rate (dynamic range of step size: ±30 dB).

5. CONCLUSION

In this paper, we proposed a new 2-bit ADM system, whose step-size adaptation algorithm is a result of modifying the adaptation algorithm of a 2-digit ADM system as described in Section 2. The employed quantizer generates output codewords that consist of two bits. The first represents the sign of the difference between the input sample and its predicted—through the quantization process—value and is used with respect to its previous value revealing a "memory" function in step-size estimation similar to that of CFDM. The second bit is used with respect to its previous value as well, in order to specify the one out of six values for the step-size multiplier in a "look-ahead" effort to minimize the quantization error both locally and at the corresponding demodulator. As computer simulation results have shown, the new system offers fast response, reduced overshoot, and high SNR values for a wide range of input signal amplitude variations, when compared to other similar ADM schemes, at the expense of some unavoidable added complexity. Furthermore, the described adaptation algorithm can be used in order to enhance the dynamic range of other analog-to-digital conversion schemes and offer high SNR performance and robustness in tracking highly varying signals.

REFERENCES

[1] N. S. Jayant, "A daptive delta modulation with a one-bit memory," *Bell Systems Technical Journal*, vol. 49, pp. 321–342, 1970.

[2] R. Steele, *Delta Modulation Systems*, Pentech Press, London, UK, 1975.

[3] N. S. Jayant, "Adaptive quantization with a one-word memory," *Bell Systems Technical Journal*, vol. 52, no. 7, pp. 1119–1144, 1973.

[4] P. Cummiskey, N. S. Jayant, and J. L. Flanagan, "Adaptive quantization in differential PCM coding of speech," *Bell Systems Technical Journal*, vol. 52, no. 7, pp. 1105–1118, 1973.

[5] D. J. Goodman and A. Gersho, "Theory of an adaptive quantizer," *IEEE Transactions on Communications*, vol. 22, no. 8, pp. 1037–1045, 1974.

[6] F. T. Sakane and R. Steele, "Two-bit instantaneously adaptive delta modulation for PCM encodin," *The Radio and Electronic Engineer*, vol. 48, pp. 187–197, 1978.

[7] G. S. Tombras, *A study of methods to improve LDM and ADM performance*, Ph.D. thesis, University of Thessaloniki, Thessaloniki, Greece, 1988.

[8] G. S. Tombras and C. A. Karybakas, "New adaptation algorithm for a two-digit adaptive delta modulation system," *International Journal of Electronics*, vol. 68, no. 3, pp. 343–349, 1990.

[9] M. A. Aldajani and A. H. Sayed, "A stable adaptive structure for delta modulation with improved performance," in *Proceedings of IEEE International Conference on Acoustics, Speech and Signal Processing (ICASSP '01)*, vol. 4, pp. 2621–2624, Salt Lake City, Utah, USA, May 2001.

[10] M. A. Aldajani and A. H. Sayed, "Stability and performance analysis of an adaptive sigma-delta modulator," *IEEE Transactions on Circuits and Systems II*, vol. 48, no. 3, pp. 233–244, 2001.

E. A. Prosalentis was born in Athens, Greece, in 1966. He received the B.S. degree in physics and the M.S. degree in electronics from the University of Athens, in 1989 and 1993, respectively. Since 1997, he has been a Professor of electronics in post-compulsory secondary education. From 2001 to 2004, he was associated with the Department of Electronics in the Technological Educational Institute (TEI) of Athens, where he was responsible for the laboratory course in radar and radio systems. He is currently a Ph.D. candidate at the Laboratory of Electronics, Department of Physics, University of Athens.

G. S. Tombras was born in Athens, Greece, in 1956. He received the B.S. degree in physics from Aristotelian University of Thessaloniki, Greece, the M.S. degree in electronics from University of Southampton, UK, and the Ph.D. degree from Aristotelian University of Thessaloniki, in 1979, 1981, and 1988, respectively. From 1981 to 1989, he was a Teaching and Research Assistant and, from 1989 to 1991, he was a Lecturer at the Laboratory of Electronics, Physics Department, Aristotelian University of Thessaloniki. From 1990 to 1991, he was with the Institute of Informatics and Telecommunications of the National Center for Science Research "Demokritos," Athens, Greece. Since 1991, he has been with the Laboratory of Electronics, Department of Physics, University of Athens, where he is currently an Associate Professor of Electronics. His research interests include mobile communications, analog and digital circuits and systems, as well as instrumentation, measurements, and audio engineering. Professor Tombras is the author of the textbook *Introduction to Electronics* (in Greek) and has authored or coauthored more than 70 journal and conference papers and many technical reports.